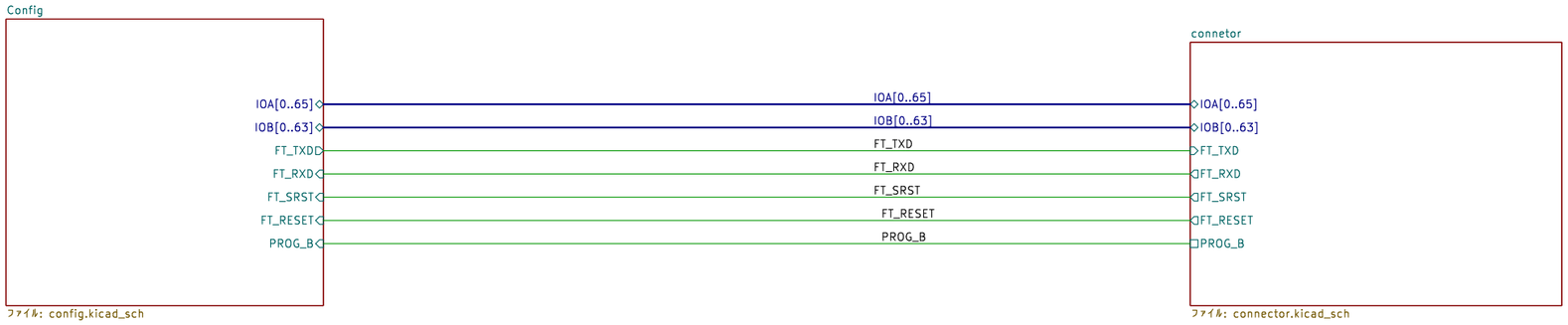

https://www.fpga.co.jp
**FPGA Information ltd**

Sheet: /
File: xc7s25a4.kicad_sch

***Title: 5 SQ  Spartan XC7S25A***

| | | |
|---|---|---|
| Size: A3 | Date: | **Rev: D** |
| KiCad E.D.A. 9.0.2 | | Id: 1/4 |

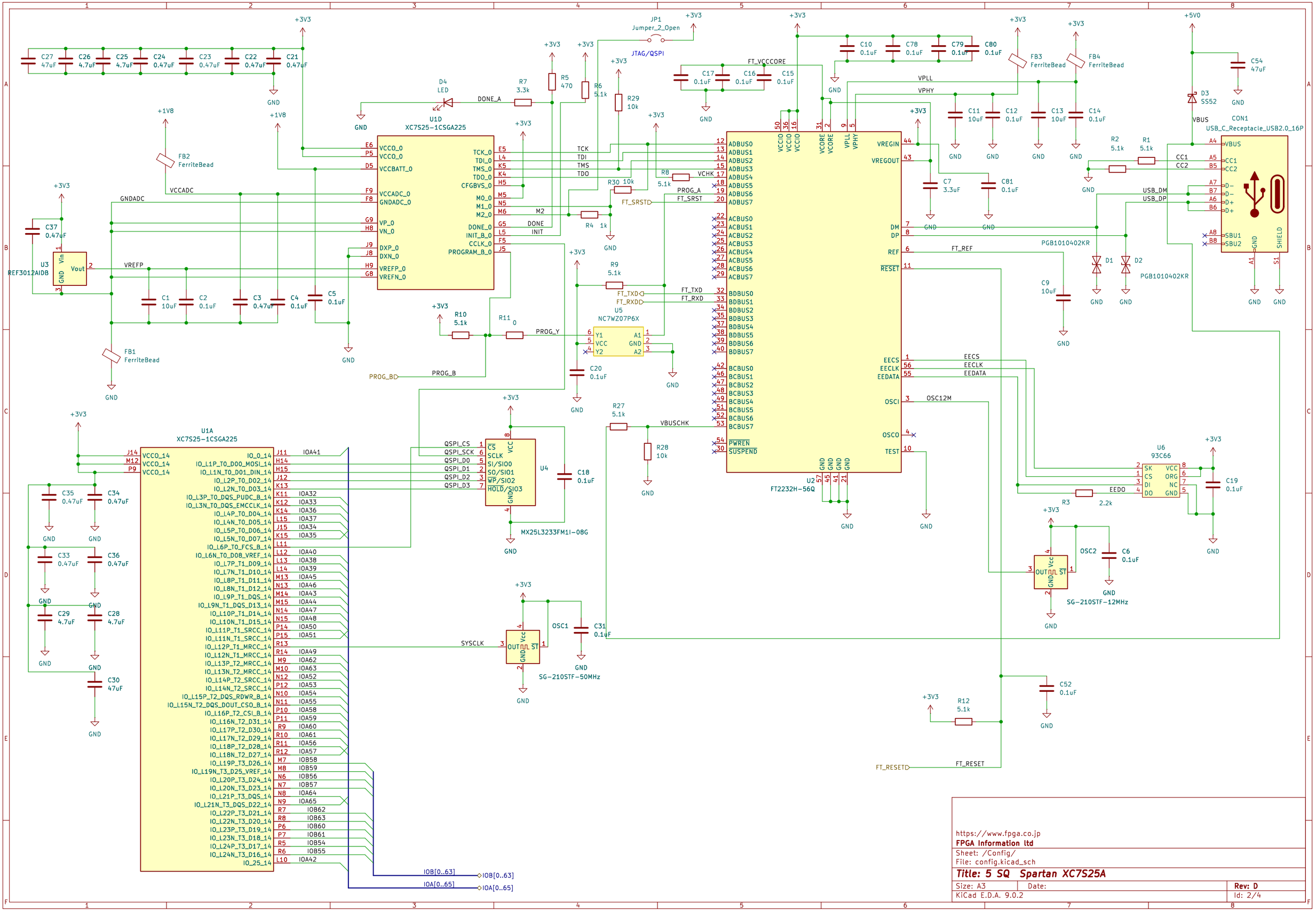


https://www.fpga.co.jp
**FPGA Information ltd**

Sheet: /Config/
File: config.kicad_sch

***Title: 5 SQ Spartan XC7S25A***

| Size: A3 | Date: | **Rev: D** |
|---|---|---|
| KiCad E.D.A. 9.0.2 | | Id: 2/4 |

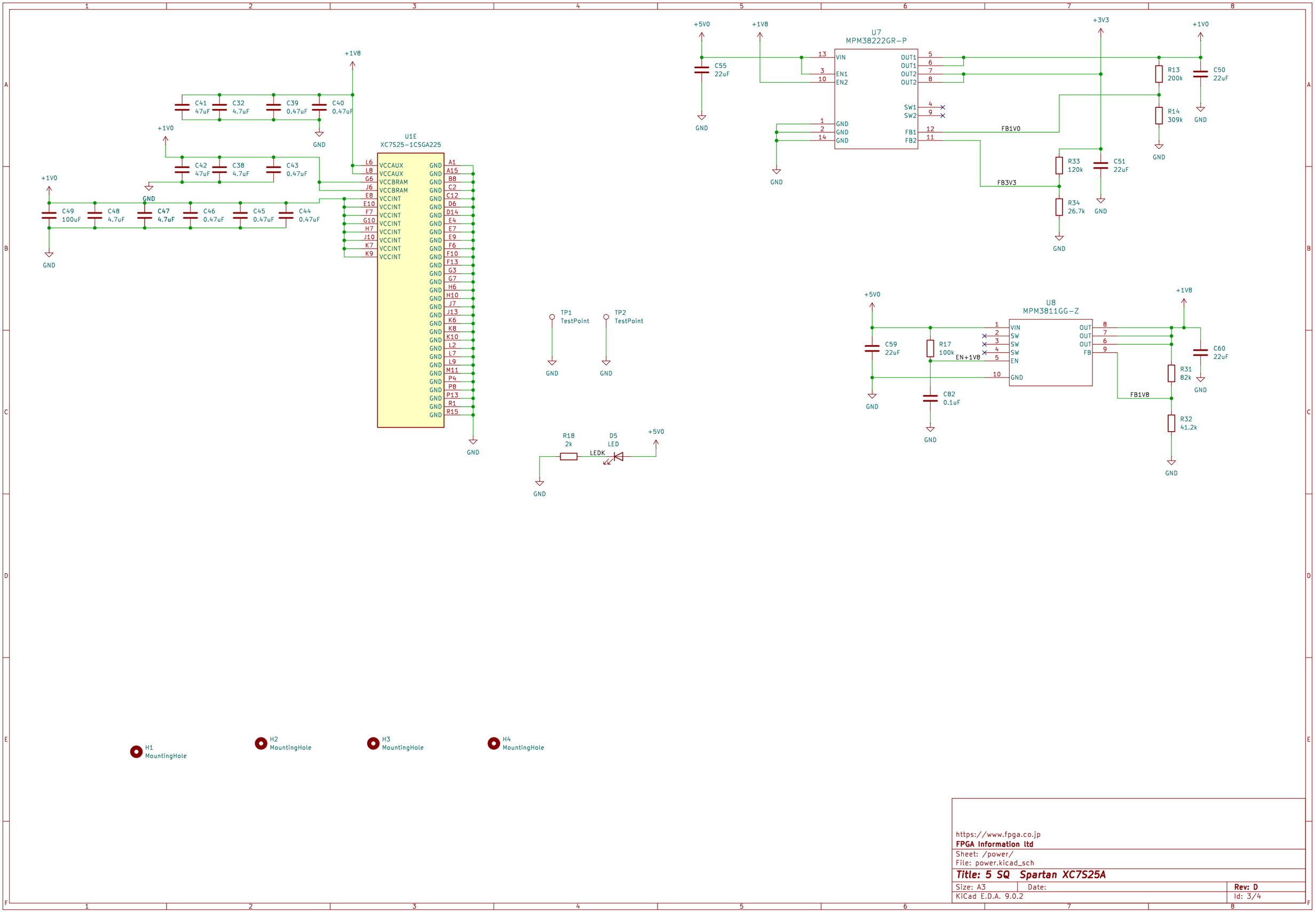


https://www.fpga.co.jp
**FPGA Information ltd**

Sheet: /power/
File: power.kicad_sch

***Title: 5 SQ Spartan XC7S25A***

| | | |
|---|---|---|
| Size: A3 | Date: | **Rev: D** |
| KiCad E.D.A. 9.0.2 | | Id: 3/4 |

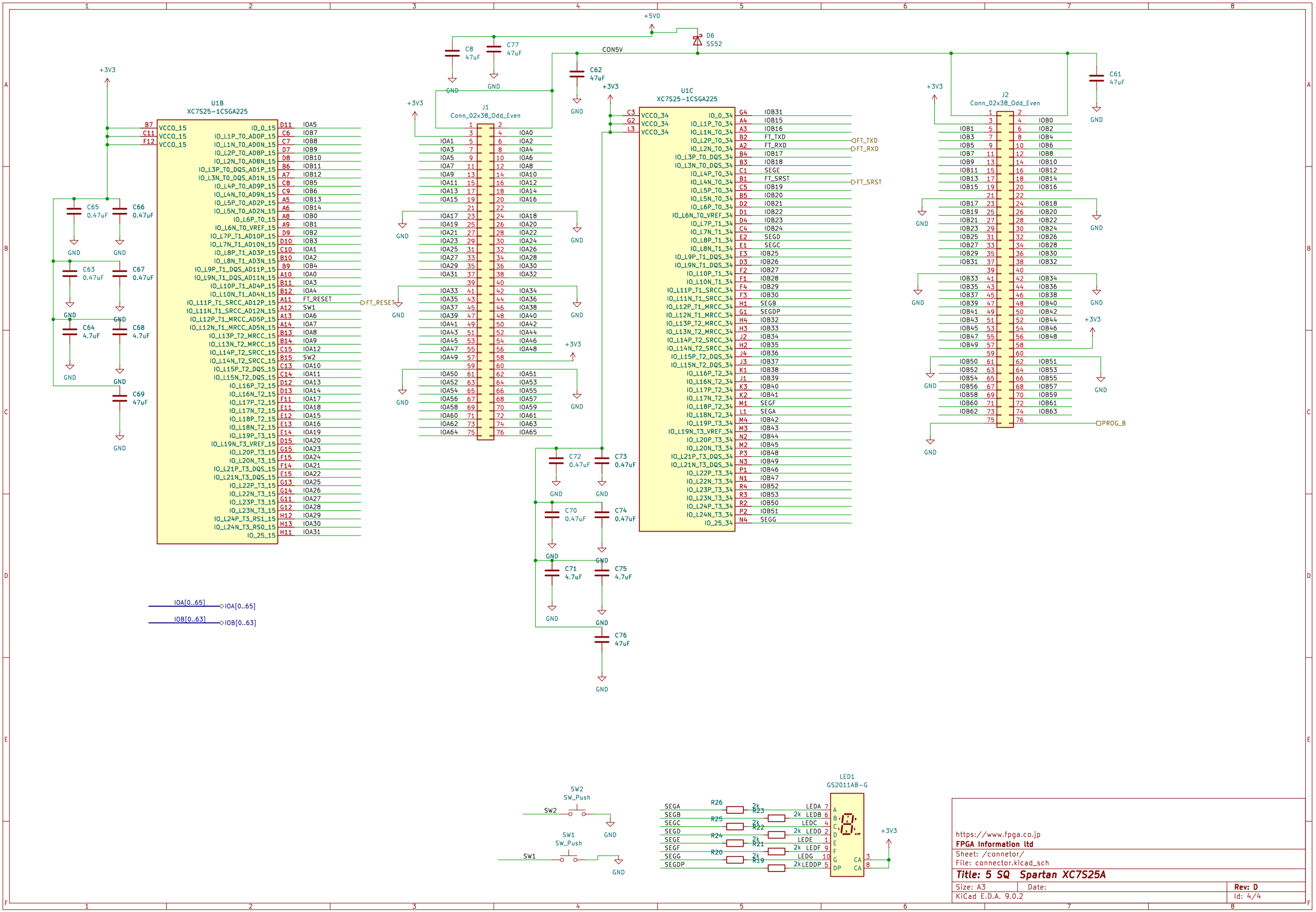


https://www.fpga.co.jp

**FPGA Information ltd**

Sheet: /connetor/

File: connector.kicad_sch

***Title: 5 SQ Spartan XC7S25A***

| | | |
|---|---|---|
| Size: A3 | Date: | **Rev: D** |
| KiCad E.D.A. 9.0.2 | | Id: 4/4 |